mimSAFE

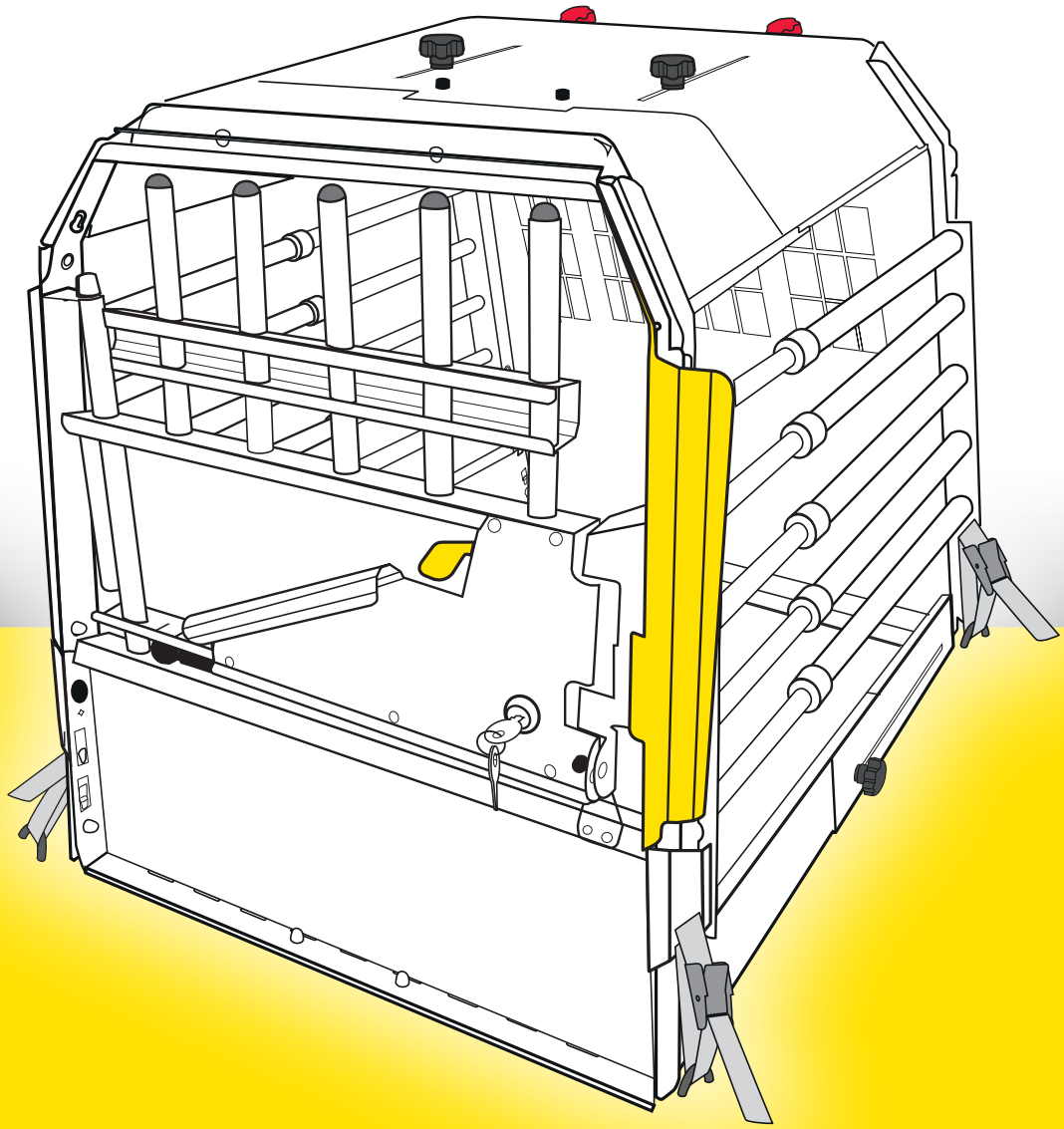

ASSEMBLY INSTRUCTIONS

VARIOCAGE

compact single

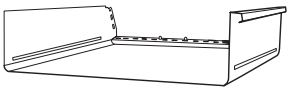

A Floor Rear

00367 00368	1X
Product no	No of items

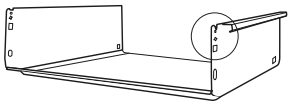

B Floor Front

00367 00368	1X
Product no	No of items

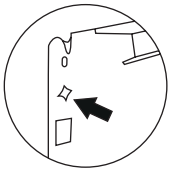

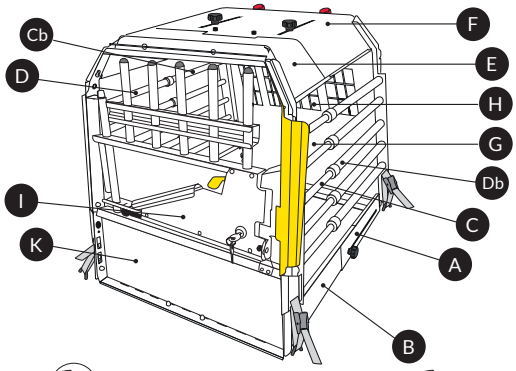

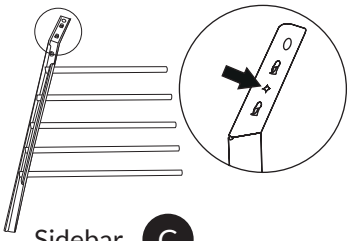

Sidebar C

00367 00368	1X
Product no	No of items

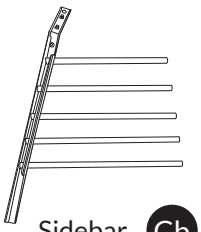

Sidebar Cb

00367 00368	1X
Product no	No of items

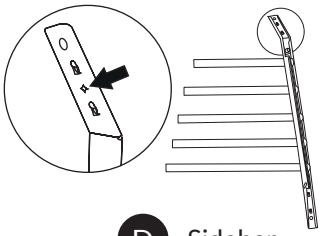

D Sidebar

00367 00368	1X
Product no	No of items

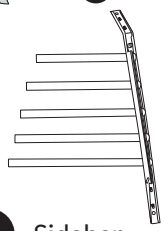

Db Sidebar

00367 00368	1X
Product no	No of items

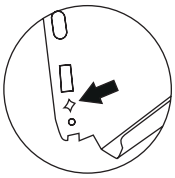

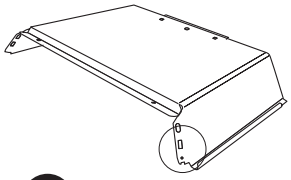

E Roof Front

00367 00368	1X
Product no	No of items

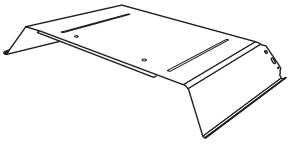

F Roof Rear

00367 00368	1X
Product no	No of items

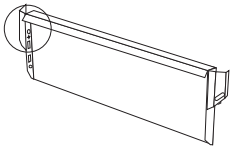

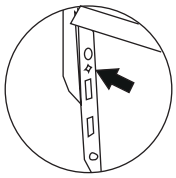

Lower Panel Front L

00367 00368	1X
Product no	No of items

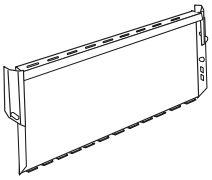

Lower Panel Rear G

00367 00368	1X
Product no	No of items

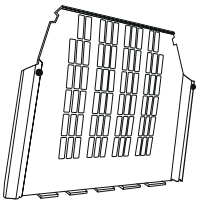

Escape Hatch H

00367 00368	1X
Product no	No of items

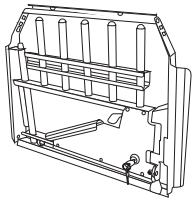

I Door Section

00367 00368	1X
Product no	No of items

ASSEMBLY KIT IS DIMENSIONED FOR THE LARGEST CAGE, FOR SMALLER CAGES YOU HAVE MORE PARTS THAN YOU NEED

M-460641D 5X 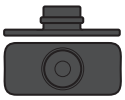 rubber	M-SM6X14IA 18X 	M-SM6X12 4X 	M-460641AQ 2X red	ALLEN KEY 4 1X 	M-460641AY 10X rubber end caps	M-460641BA 10X plastic end caps
M-R3015M5S 4X 	M-B13265SLD 4X Ø13mm plastic	M-VBM5X16 4X 	M-10240 4X 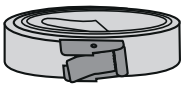			

STEP 1

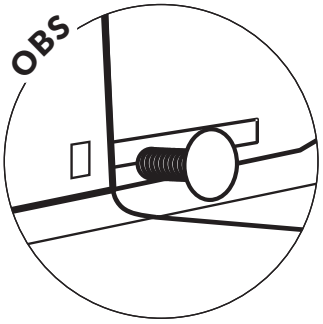

M-R3015M5S	M-B13265SLD	M-VBM5X16
2X	2X	2X
	Ø13mm	
	plastic	

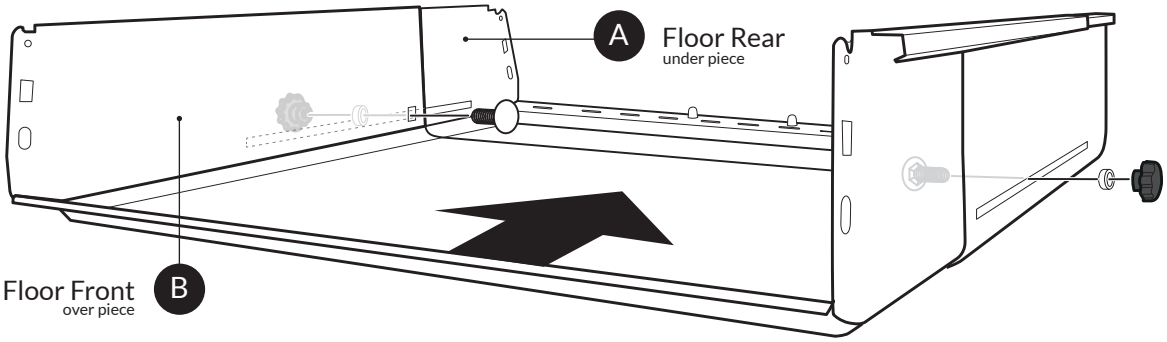

STEP 2

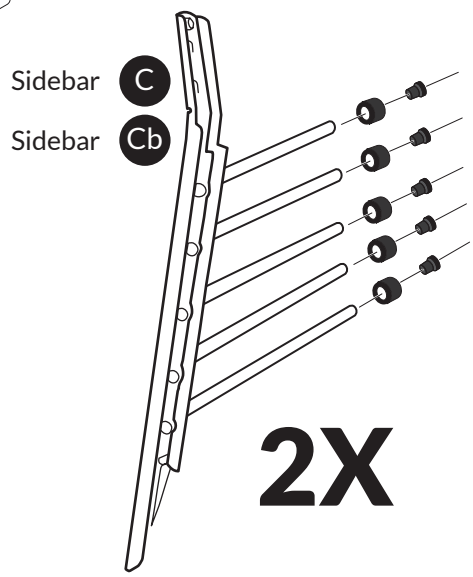

STEP 3

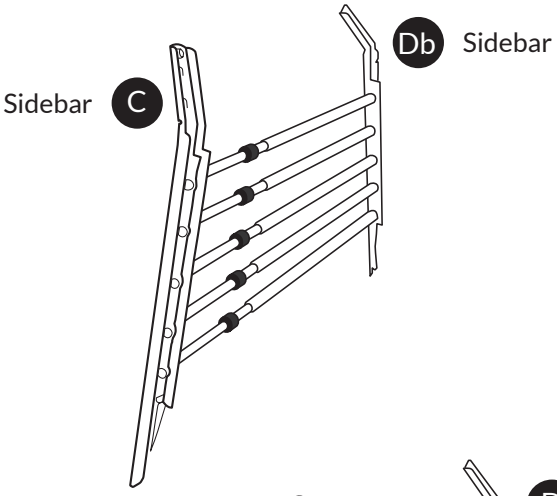

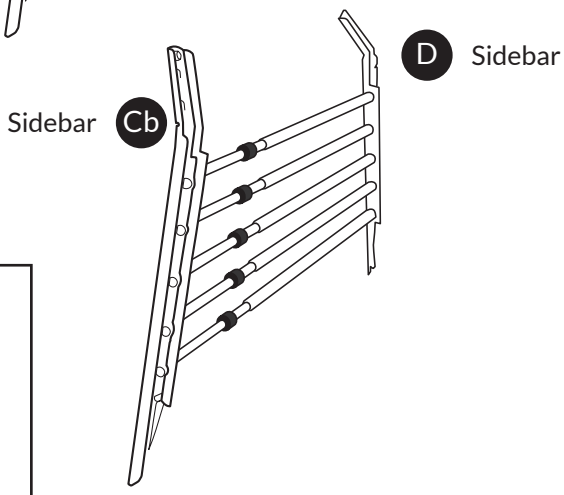

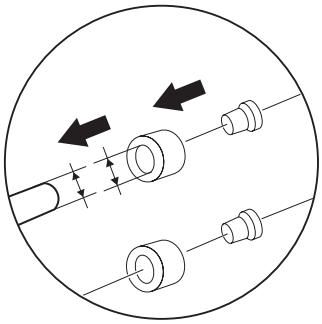

M-460641AY	M-460641BA
10X	10X
rubber end caps	plastic end caps

STEP 4

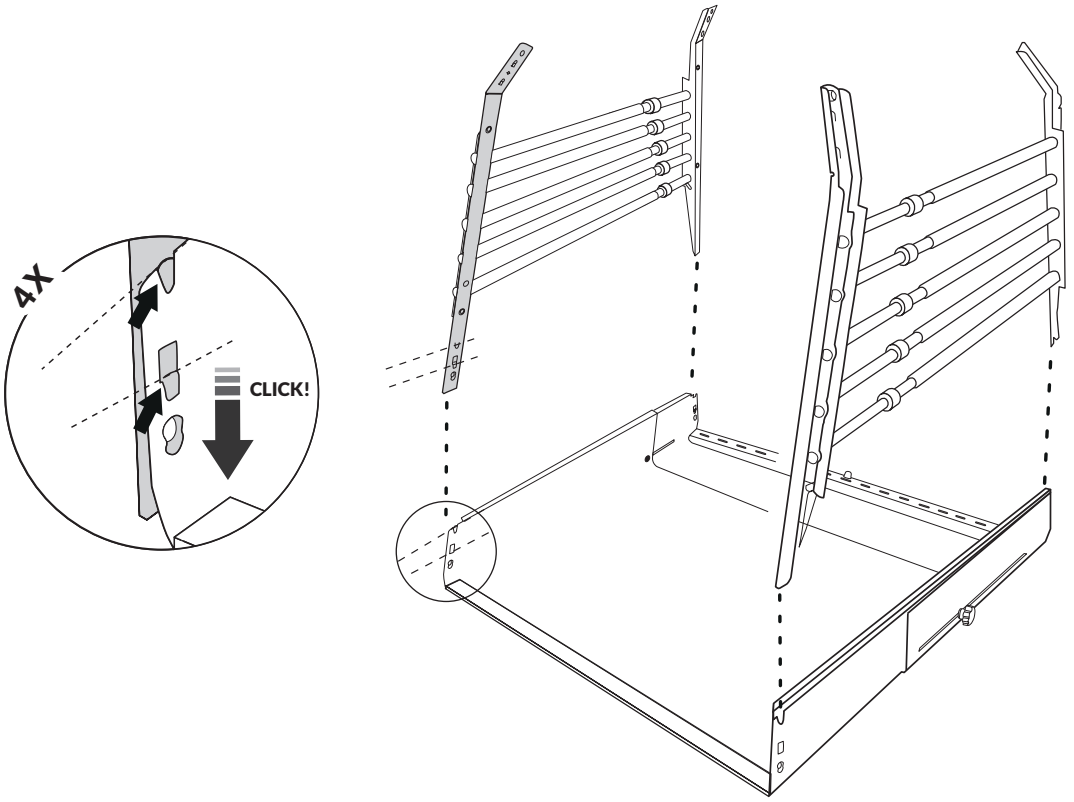

STEP 5

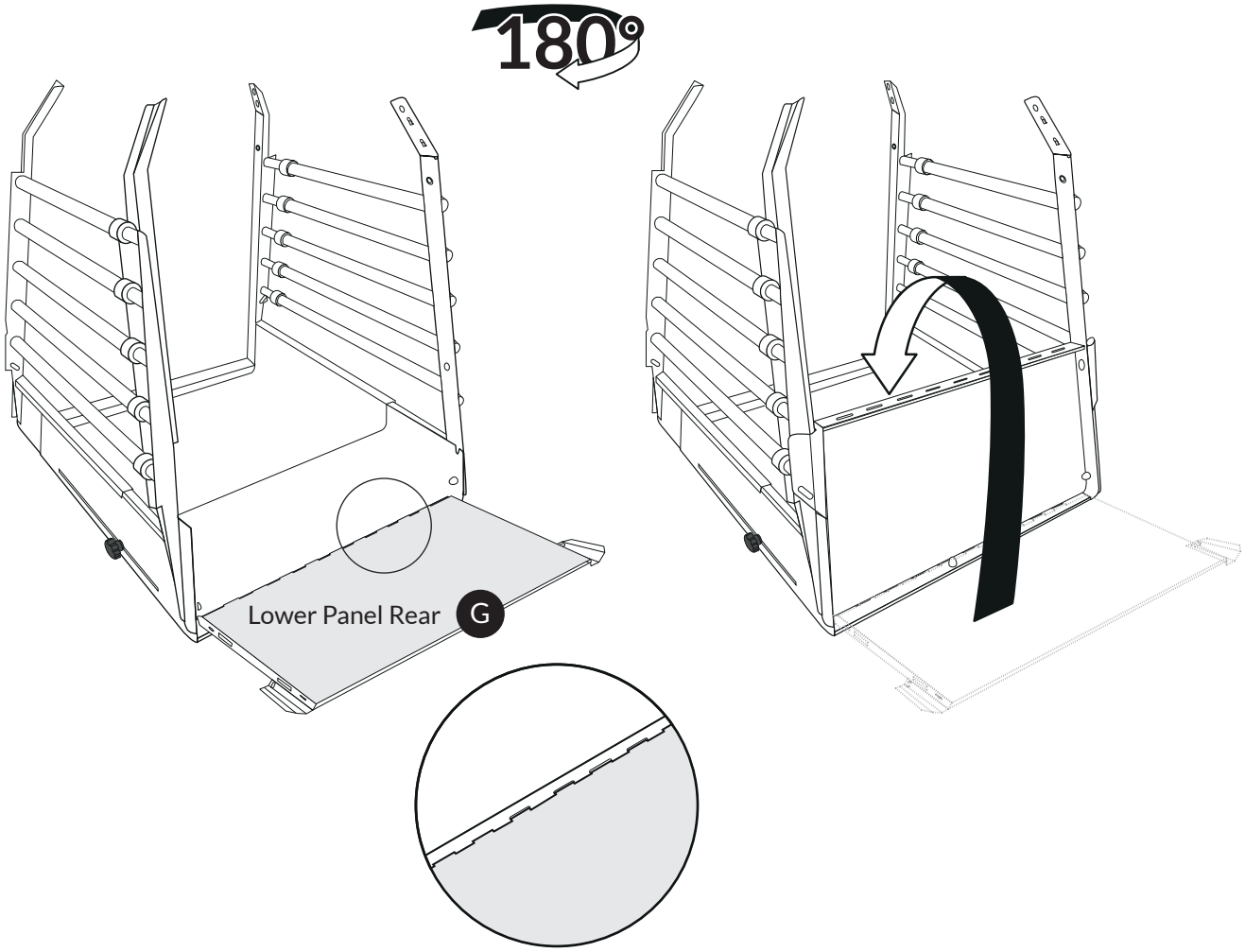

STEP 6

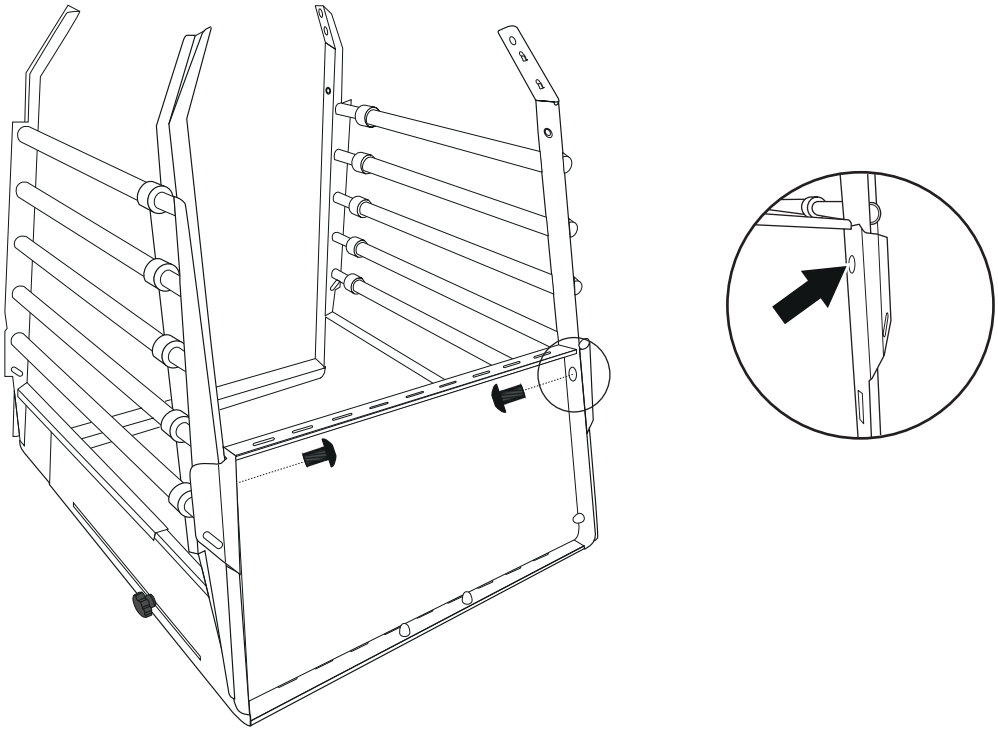

M-SM6X12
2X

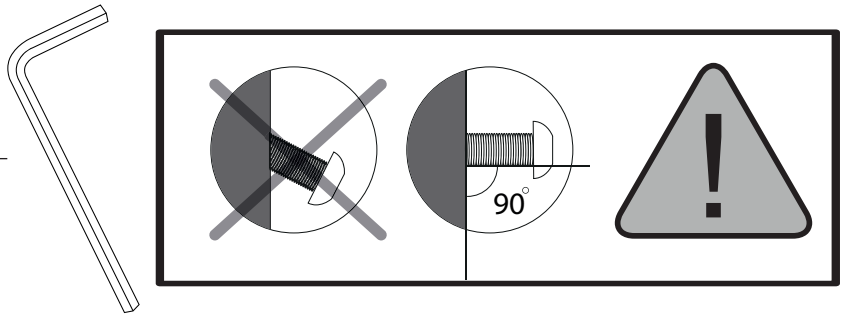

STEP 7

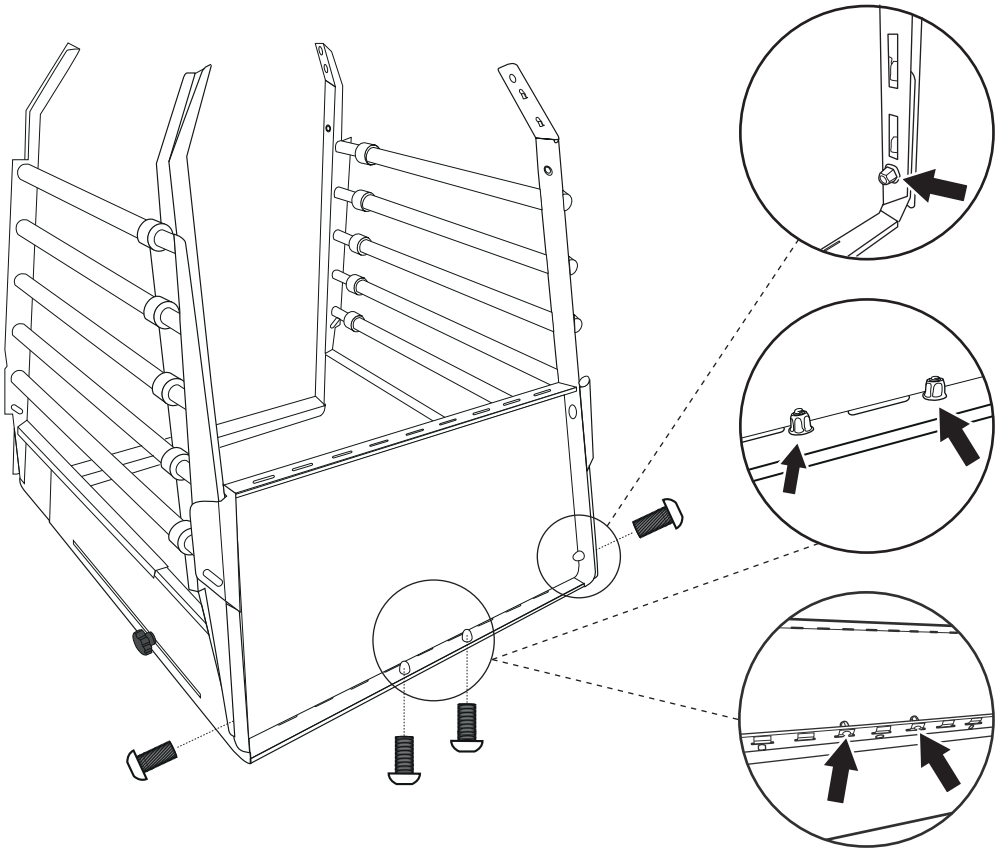

M-SM6X14IA
4X

STEP 8

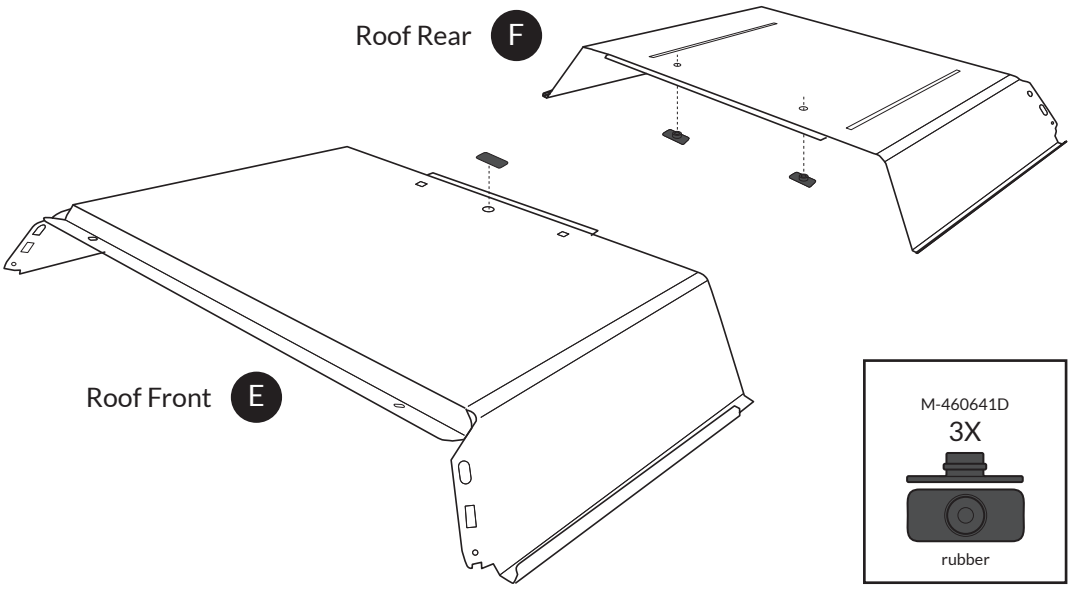

STEP 9

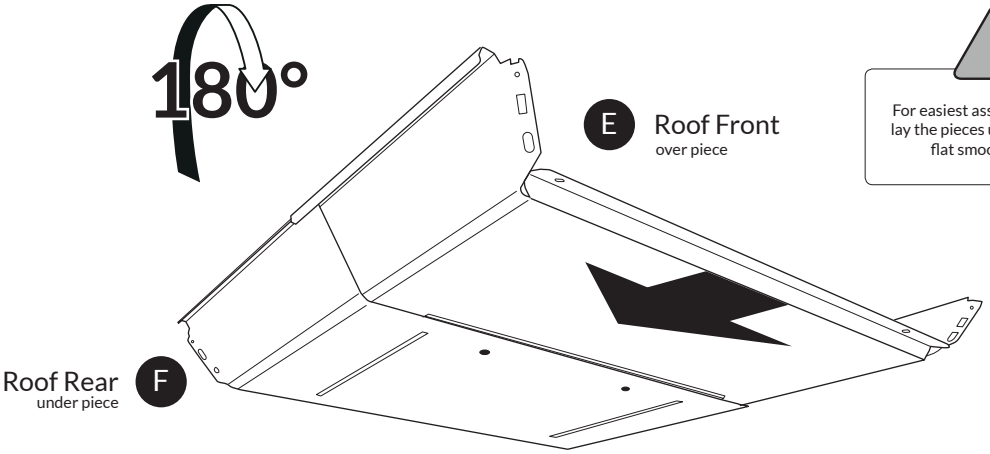

For easiest assembling method lay the pieces upside down on a flat smooth surface.

STEP 10

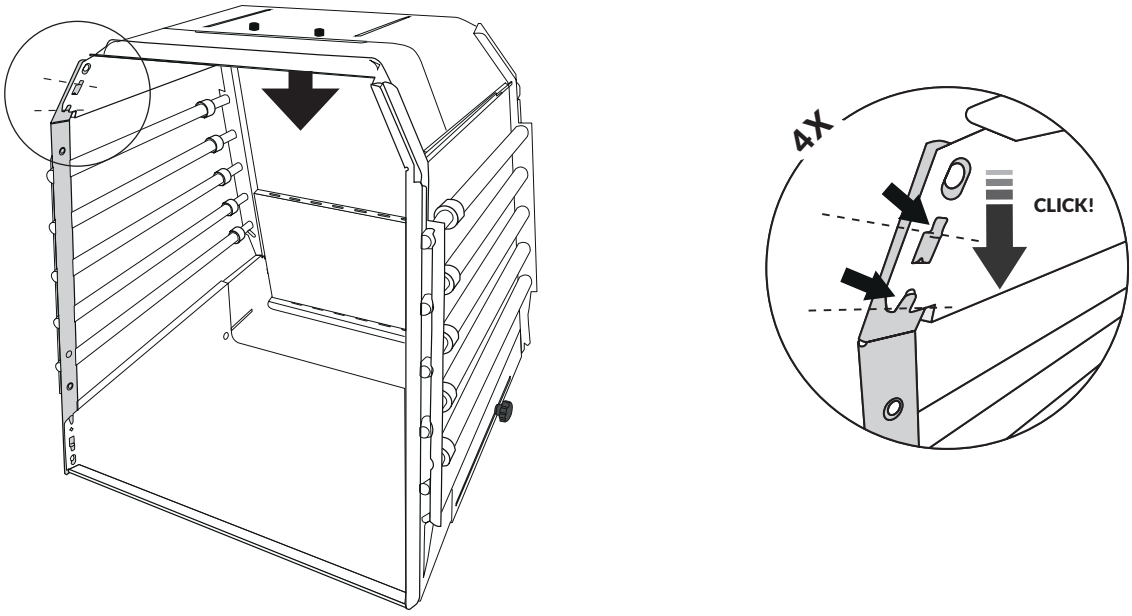

STEP 11

M-SM6X14IA
2X

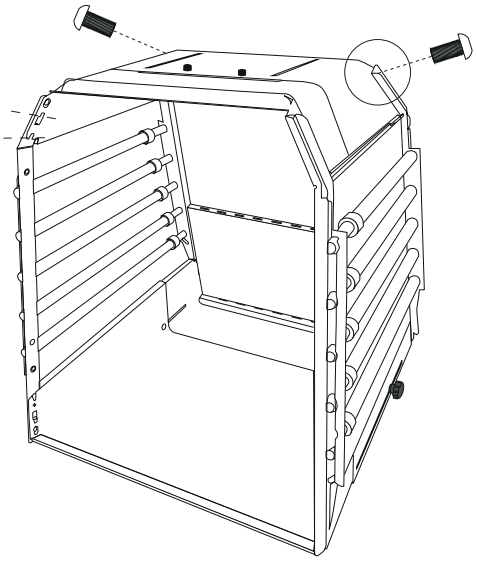

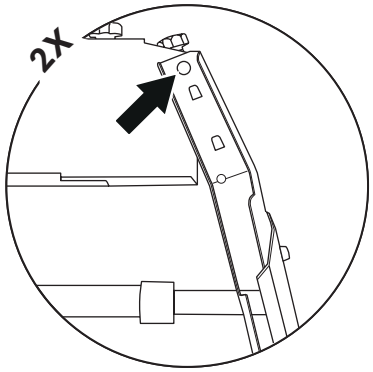

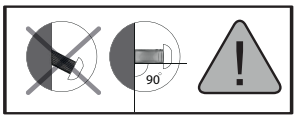

STEP 12

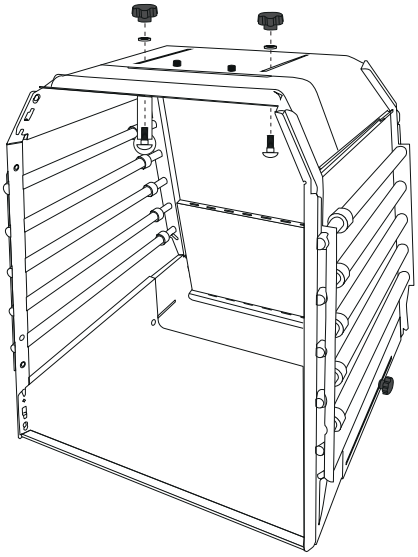

M-R3015M5S	M-B13265SLD	M-VBM5X16
2X	2X	2X
	Ø13mm	
	plastic	

STEP 13

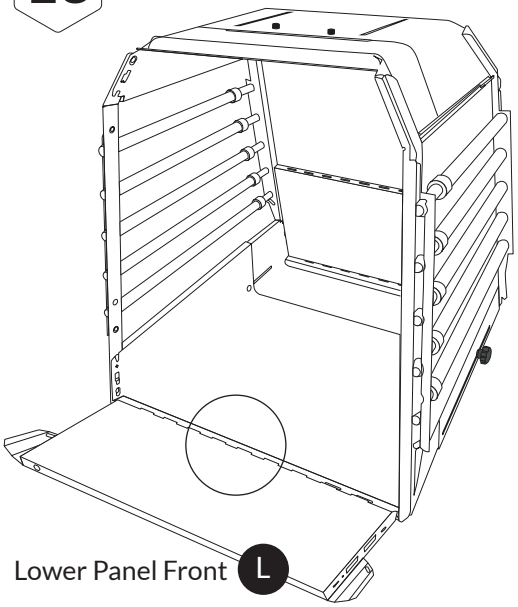

M-SM6X14IA	M-SM6X12
4X	2X

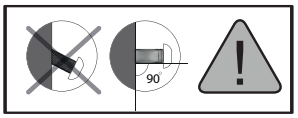

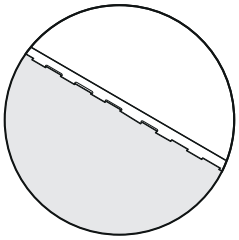

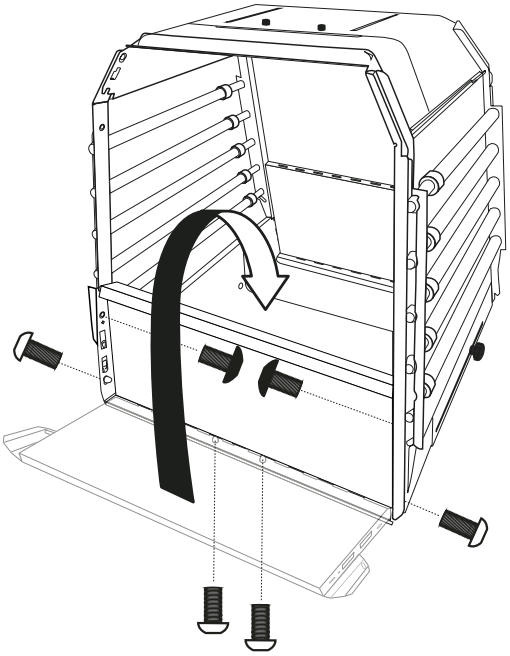

STEP 14

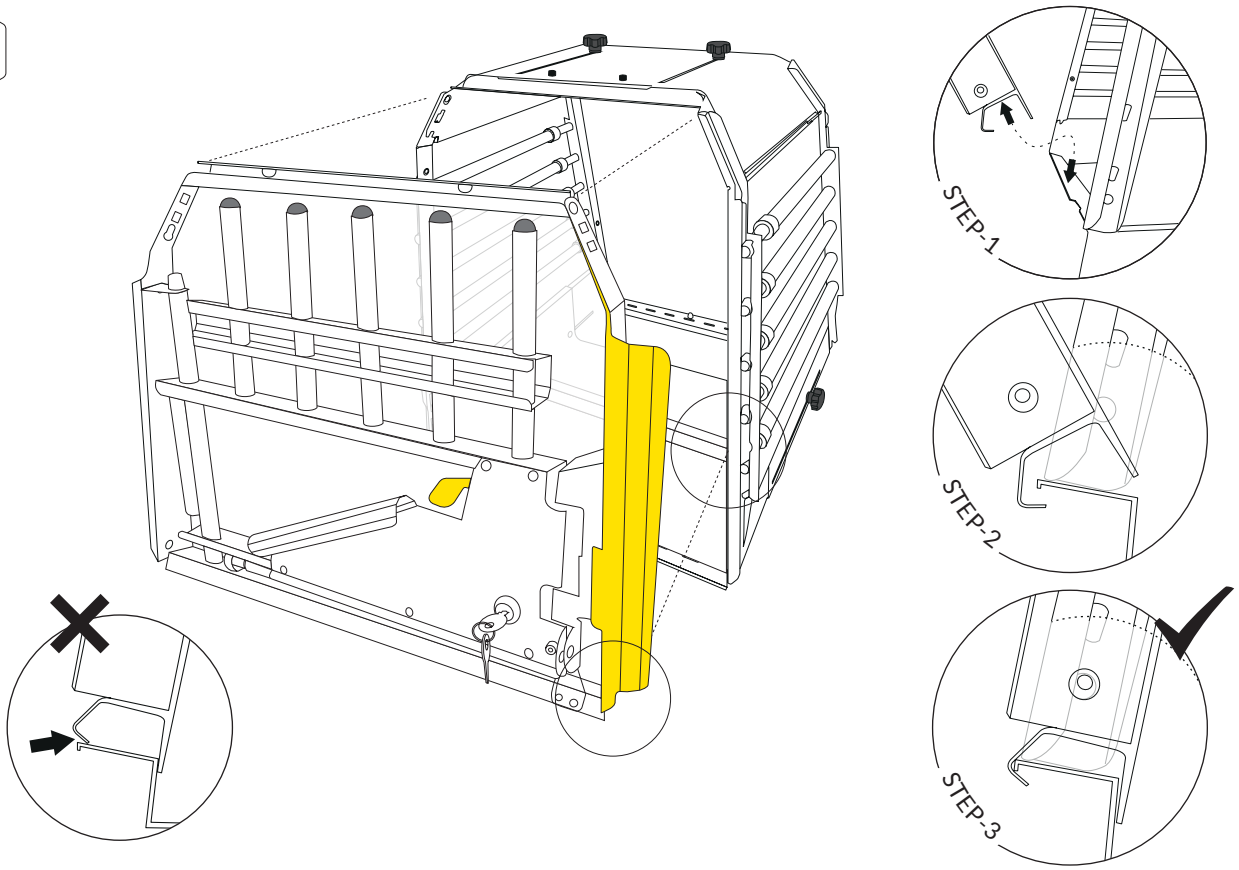

STEP 15

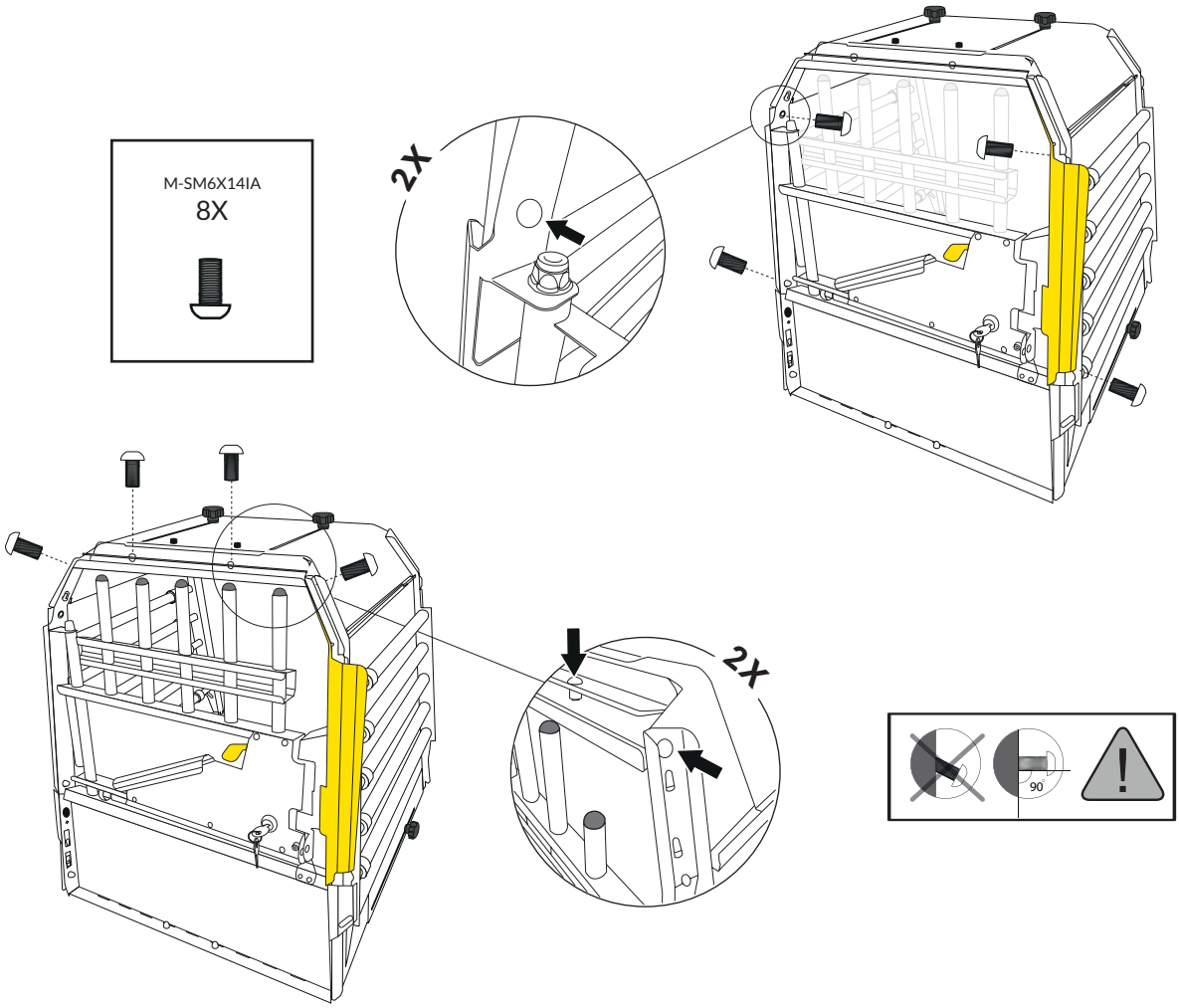

STEP 16

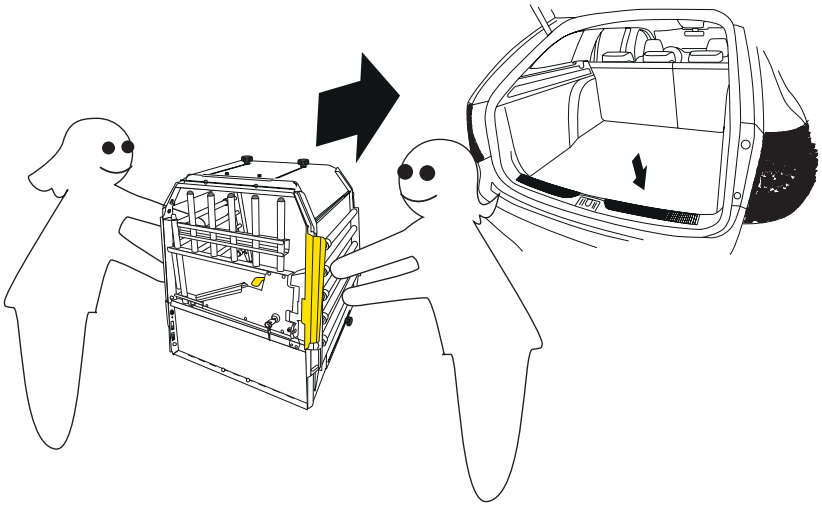

STEP 17

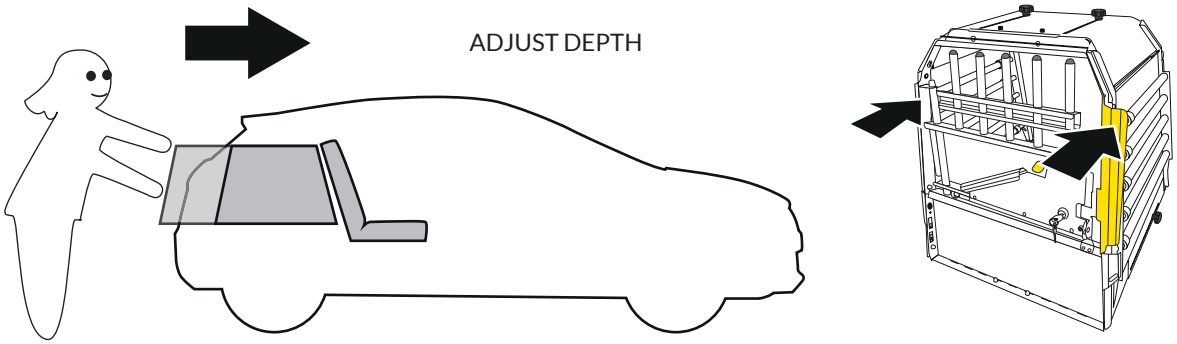

STEP 18

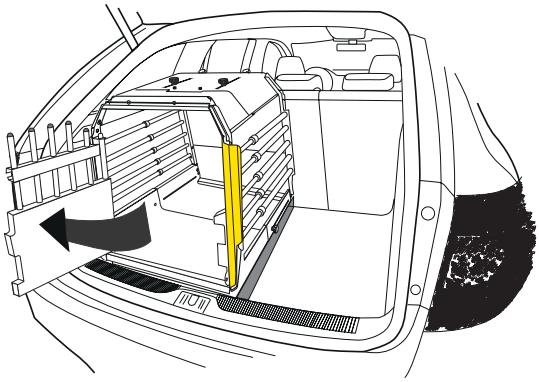

STEP 19

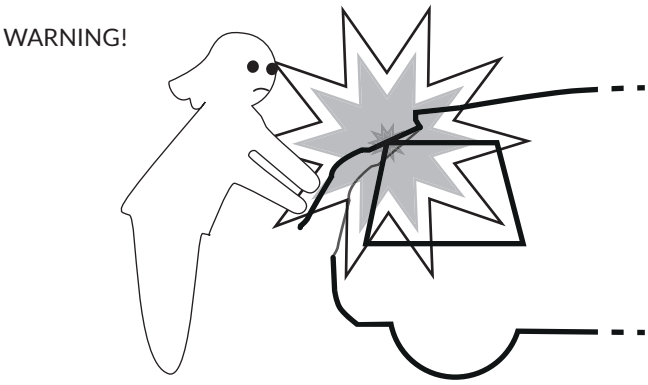

STEP 20

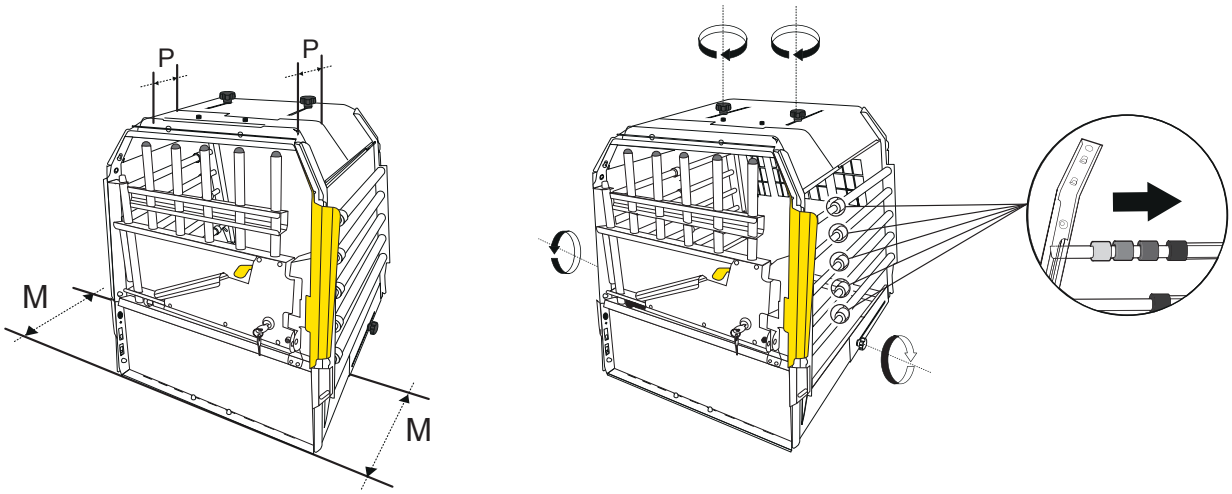

STEP 21

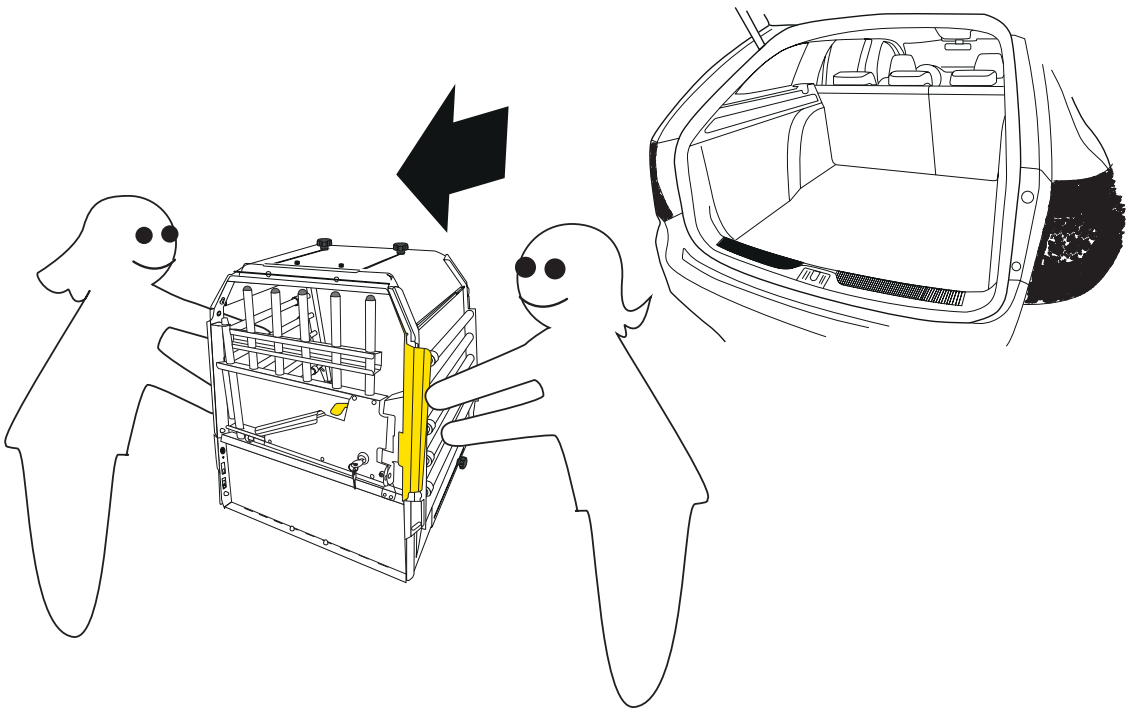

STEP 22

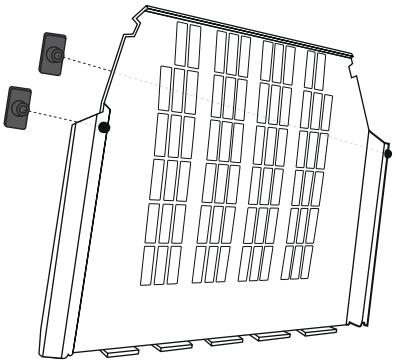

H Escape Hatch

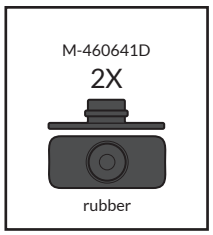

STEP 23

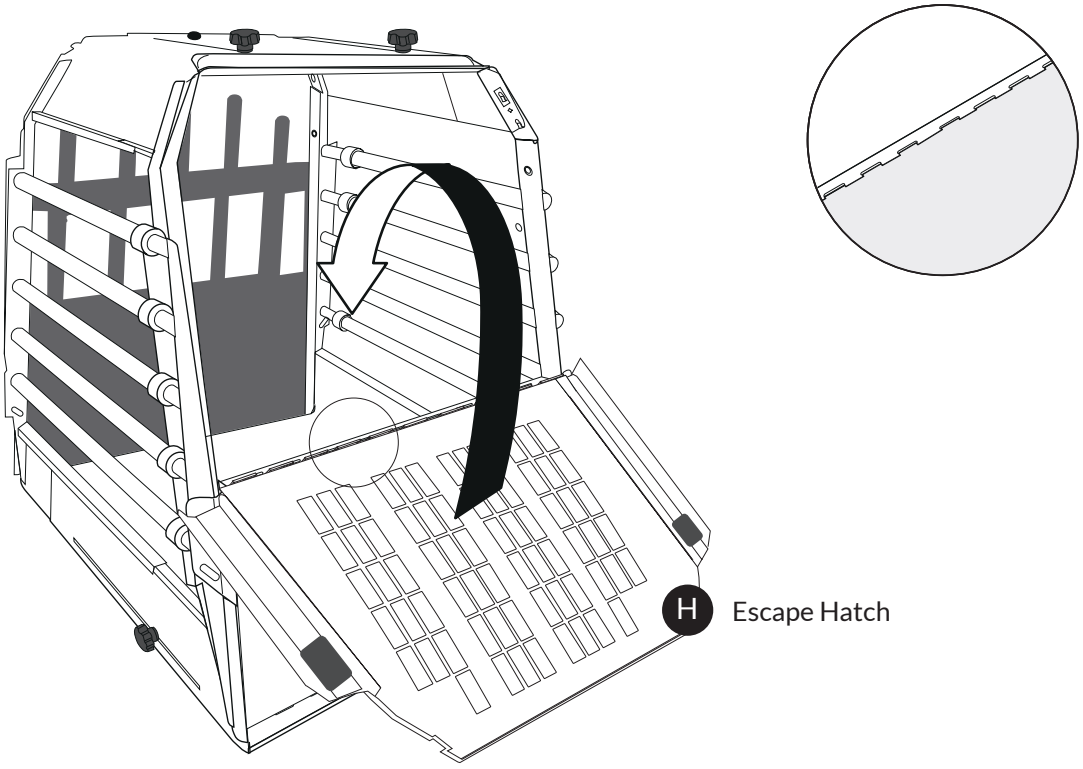

STEP 24

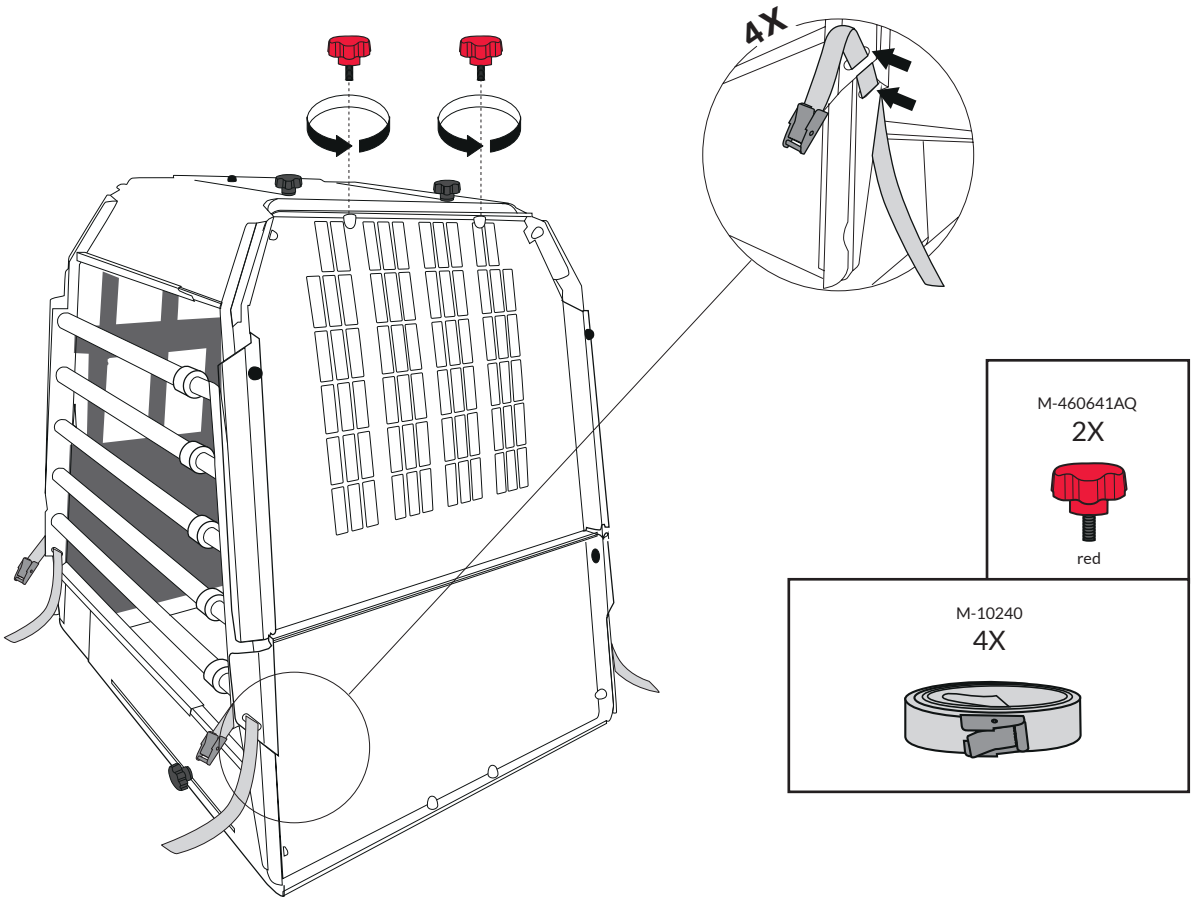

STEP 25

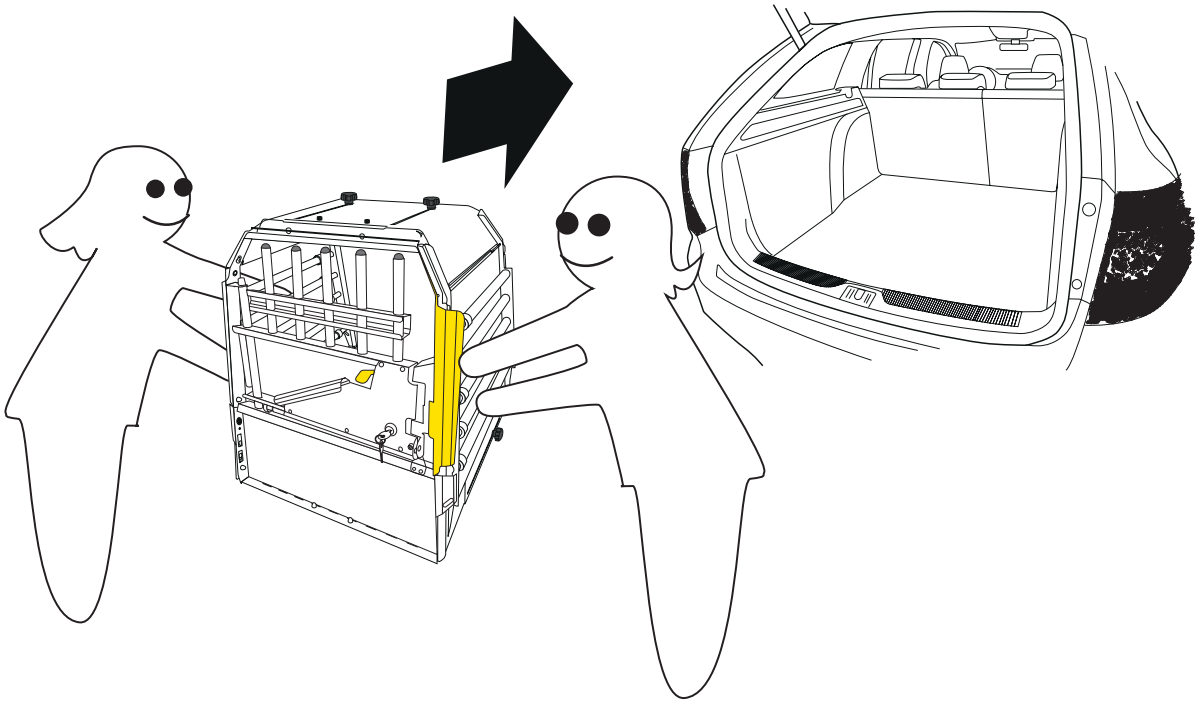
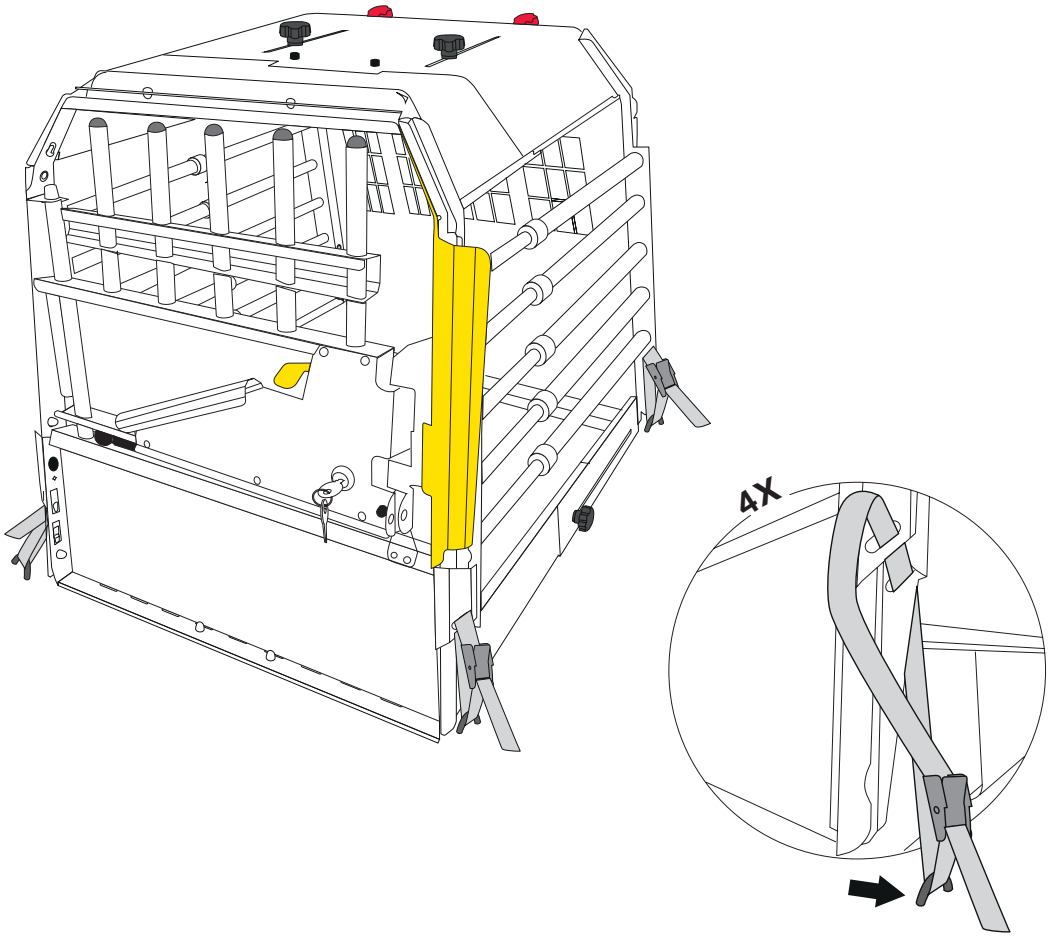
STEP 26